MACAP®

Model
P200 - P202

Evol.	Table	Date
3	1	03/02/2020

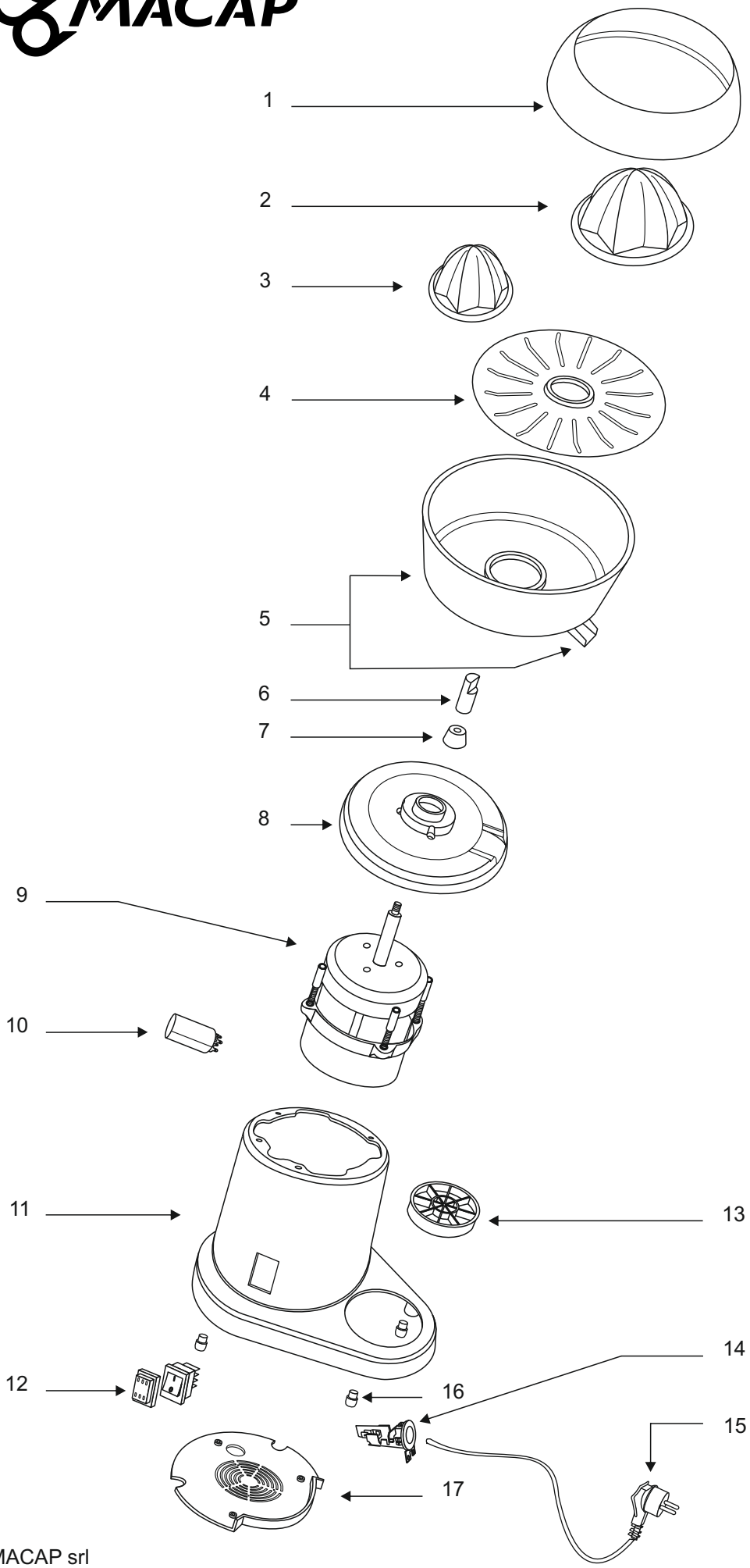

	N.	Code	Features
	1	C0007S807	
	2	C0007S822	
	3	C0007S8221	
	4	C0007S809	
	5	C0004S818	P200
		C0007S821	P202
	6	C0004S8051	
	7	C0004S813	
	8	C0007S801	
	9	C00061220	230V-50Hz
		C000612201	220V-60Hz
		C000612202	110V-60Hz
	10	C00061126	230V-50/60Hz
		C00061109	110V-60Hz
	11	C0001S808	P200
		C0001S809	P202
	12	C00061021	
	13	C0007S820	
	14	C00061612	
	15	C00061517	SHUKO
		C000615171	USA
		C000615172	UK
		C000615173	SWITZERLAND
		C000615174	AUSTRALIA
		C000615175	BRAZIL
	16	C000716140	
	17	C0007S816	

Descriptions	
	Available
	Not available

MACAP srl
Via Toniolo 18 - 30030 - Maerne - (VE) - Italy - Tel. +39 041 5030466 Fax +39 041 5030477
www.macap.it - www.dynamometrictamper.com - info@macap.it