MACAP®

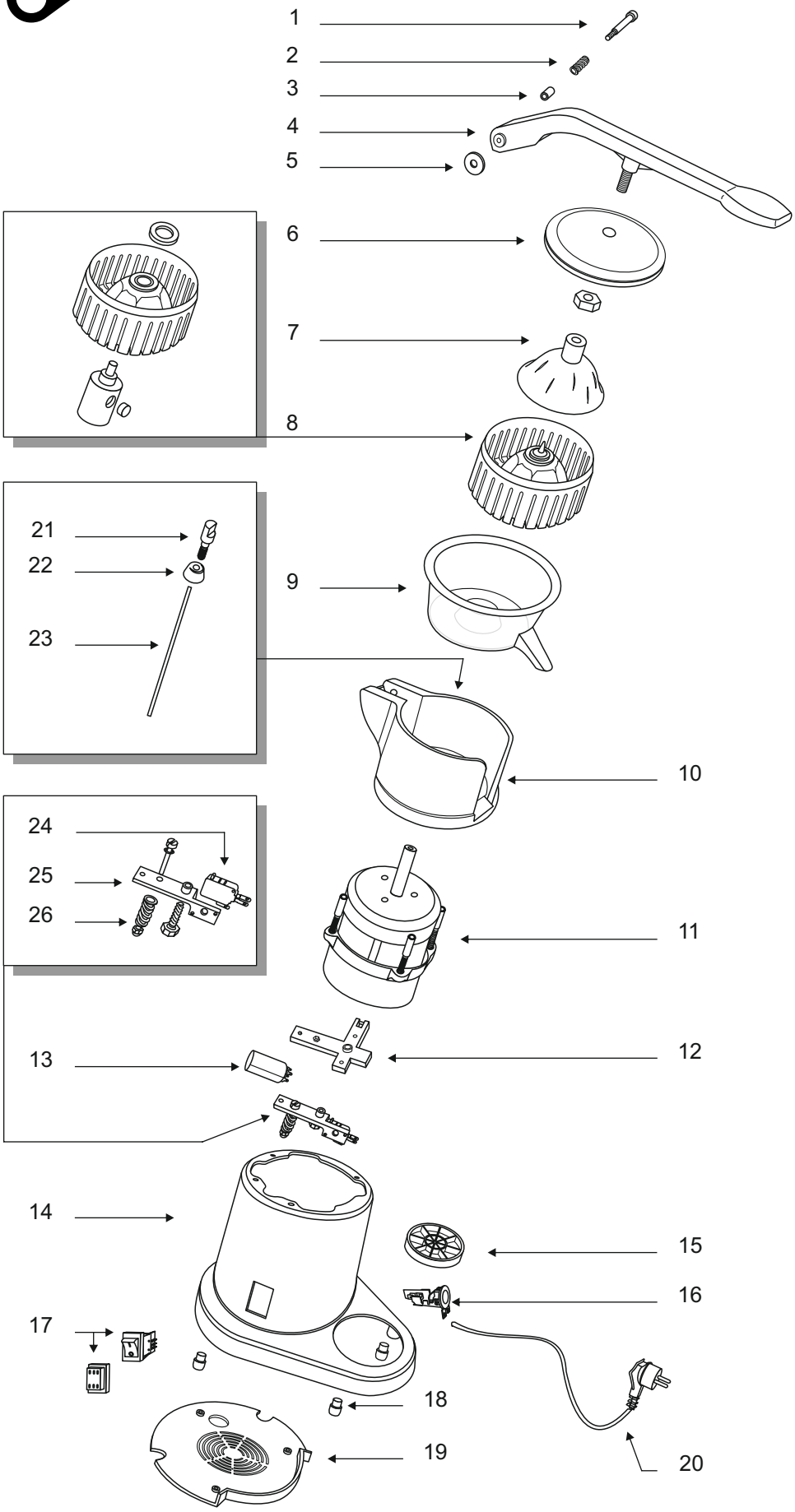

Model
P206

Evol.	Table	Date
2	1	03/02/2020

	N.	Code	Features
	1	C0004S814	
	2	C0008XX01	
	3	C00071615	
	4	C0003S802	
	5	C0004XX01	
	6	C0004S816	
	7	C0004S817	
	8	C0004S803	
	9	C0007S810	
	10	C0003S804	
	11	C00061227	230V-50Hz
		C000612271	220V-60Hz
		C000612272	110V-60Hz
	12	C0002S803	
	13	C00061107	230V-50/60Hz
		C00061108	110V-60Hz
	14	C0001S808	
	15	C0007S820	
	16	C00061612	
	17	C00061001	
	18	C000716140	
	19	C0007S816	
	20	C00061517	SHUKO
		C000615171	USA
		C000615172	UK
		C000615173	SWITZERLAND
		C000615174	AUSTRALIA
	21	C0004S804	
	22	C0004S812	
	23	C0004S809	
	24	C00061016	
	25	C0002S802	
	26	C0008S802	

Descriptions	
	Available
	Not available

MACAP srl
Via Toniolo 18 - 30030 - Maerne - (VE) - Italy - Tel. +39 041 5030466 Fax +39 041 5030477
www.macap.it - www.dynamometrictamper.com - info@macap.it