КОТЕЛ ЭЛЕКТРИЧЕСКИЙ 900 СЕРИИ TATRA TEK.129

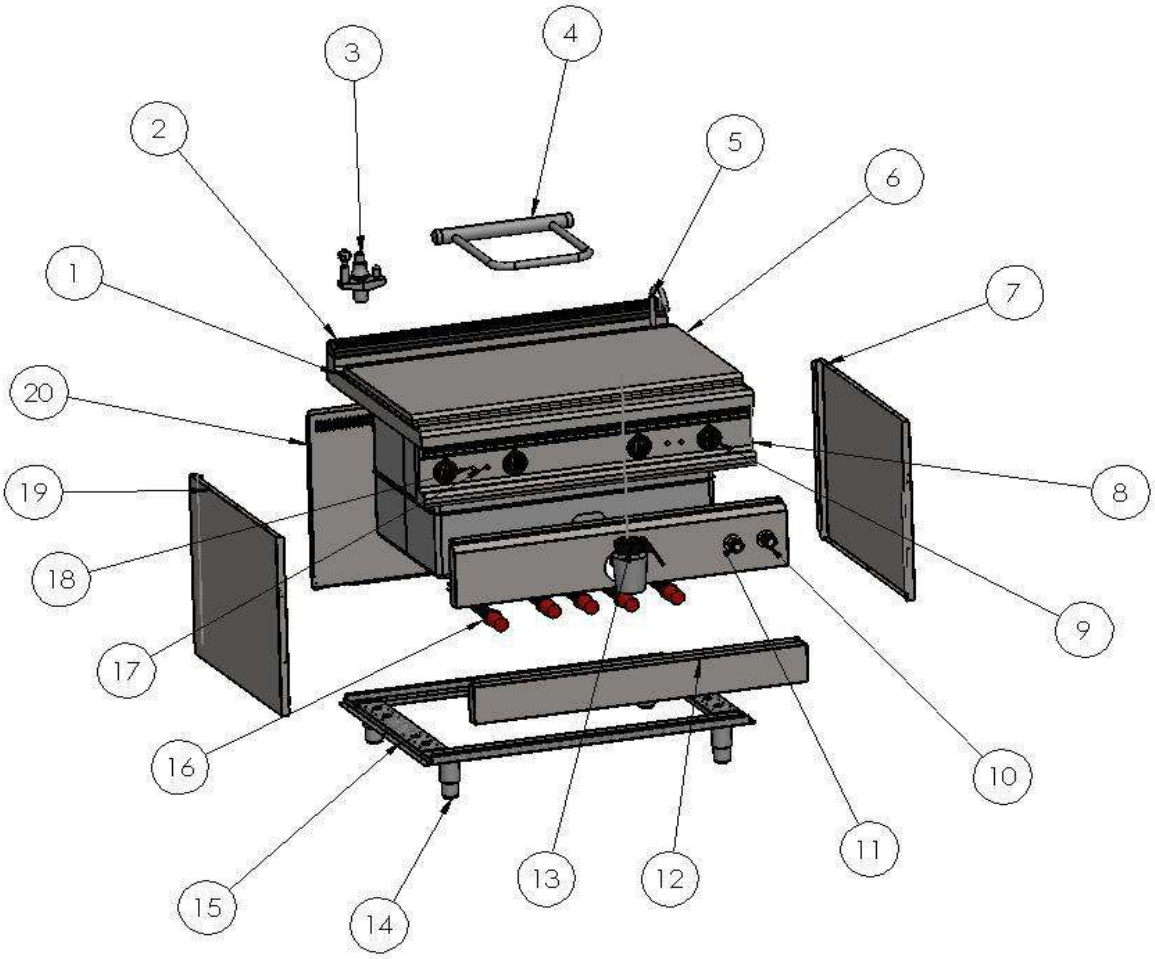

TATRA

КОТЕЛ ЭЛЕКТРИЧЕСКИЙ 900 СЕРИИ TATRA TEK.129

1	TOP PLATE	Y.EMP.PLS.KTE.250.001	
2	CHIMNET	Y.EMP.PLS.KTE.250.002	
3	PRESSURE CLOCK	Y.EMP.PLS.KTE.250.003	
4	MECANISM	Y.EMP.PLS.KTE.250.004	
5	TAP	Y.EMP.PLS.KTE.250.005	
6	LID	Y.EMP.PLS.KTE.250.006	
7	LEFT PANEL	Y.EMP.PLS.KTE.250.007	
8	FRONT PANEL	Y.EMP.PLS.KTE.250.008	
9	BUTTON	Y.EMP.PLS.KTE.250.009	
10	JACKET WATER INLET TAP	Y.EMP.PLS.KTE.250.010	
11	LEVEL DETECTION TAP	Y.EMP.PLS.KTE.250.011	
12	FRONT BOTTOM PANEL	Y.EMP.PLS.KTE.250.012	
13	DRAINAGE VALVE	Y.EMP.PLS.KTE.250.013	
14	ROTIL FOOT	Y.EMP.PLS.KTE.250.014	
15	HALF-DOZEN	Y.EMP.PLS.KTE.250.015	
16	HEATING ELEMENT	Y.EMP.PLS.KTE.250.016	
17	THERMOSTAT	Y.EMP.PLS.KTE.250.017	
18	SWITCH	Y.EMP.PLS.KTE.250.018	
19	RIGHT SIDE PANEL	Y.EMP.PLS.KTE.250.019	
20	REAR PANEL	Y.EMP.PLS.KTE.250.020	

TATRA