ПОВПОВЕРХНОСТЬ ЖАРОЧНАЯ ЭЛЕКТРИЧЕСКАЯ 900 СЕРИИ TATRA TET.89RF

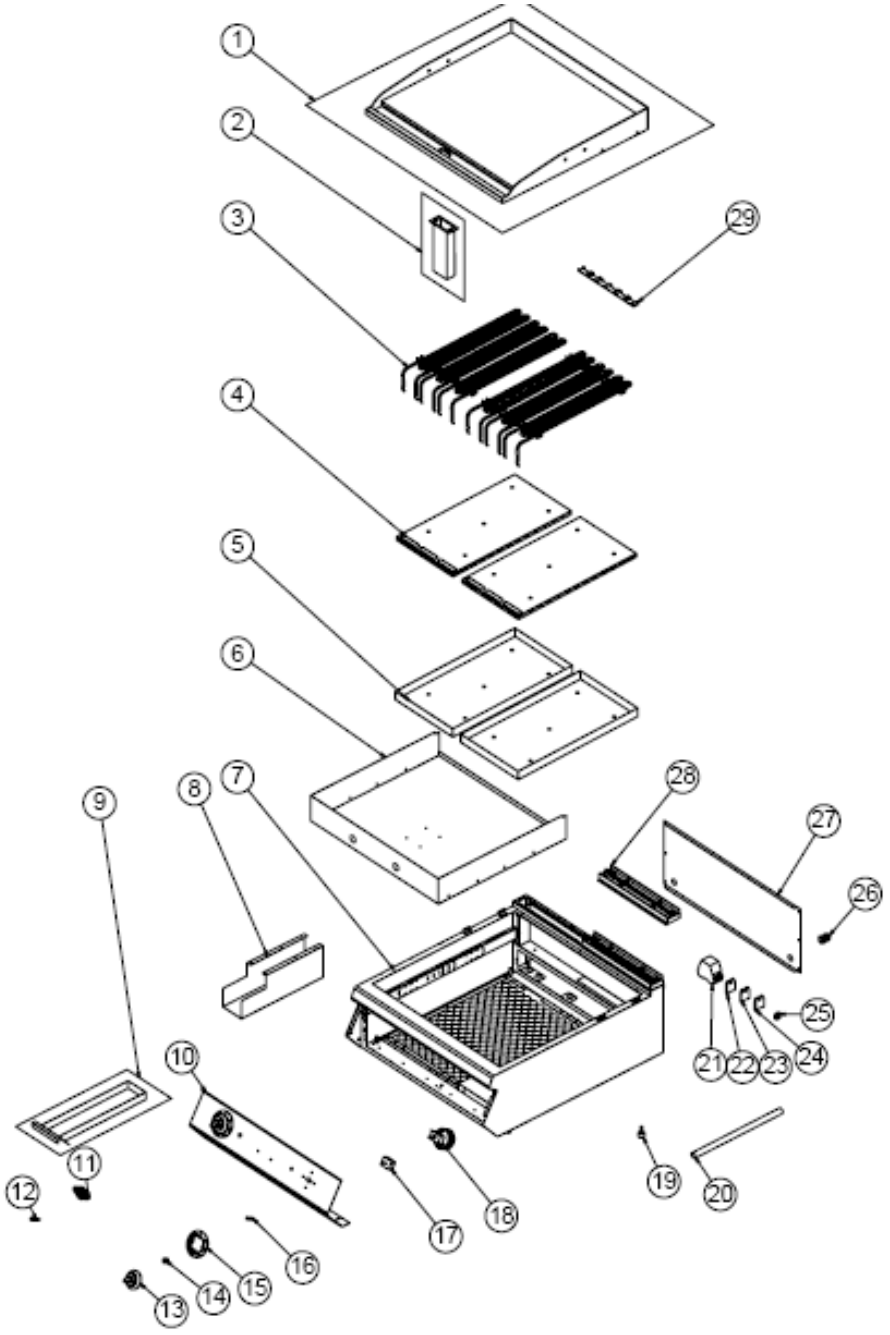

				TATRA

ПОВПОВЕРХНОСТЬ ЖАРОЧНАЯ ЭЛЕКТРИЧЕСКАЯ 900 СЕРИИ TATRA TET.89RF

1	PLATINUM	ARA-KNX.PG9-0015	
2	PROFILE	ARA-KNX.PG7-0002	
3	230V 2000W RESISTANCE	M.ELK-RZS-BRU-IZG-014	
4	INSULATION BOTTOM SHEET	YSC-KNX.PG9-PN-0071	
5	INSULATION TOP SHEET	YSC-KNX.PG9-PN-0079	
6	COMBUSTION SECTION	YSC-KNX.PG9-PN-0649	
7	CHASSIS	-	
8	SLIDE SHEET	YSC-KNX.PG7-PN-0582	
9	DRAWER	ARA-KNX.PG9-0010	
10	FRONT PANEL	YSC-KNX.PG9-LZ-0754	
11	TICKET	M.AKS-OZL-MTL-006	
12	SIGNAL LAMP	M.ELK-LMB-SNY-002	
13	BUTTON	M.AKS-DGM-EMP-024	
14	BUTTON SOCKET 6 MM	M.AKS-DGM-SKT-002	
15	50-300 °C BUTTON BUFFER	M.AKS-DGM-EMP-017	
16	M4 FRAME SPRING	M.YAY-PG-004	
17	360°C LIMITOR	JP.M.ELK-MEK-LMT-004	
18	16A 400V THERMOSTAT	M.ELK-MEK-TRM1-005	
19	M10*35 FOOT	JP.M.AKS-AYK-PLS-002	
20	CABLE PIPE 720 MM	YBR-KNX.PG9-KS-0004	
21	CONTACTOR 230V	JP.M.ELK-KNT-KNT-006	
22	AVK 16 TERMINAL	JP.M.ELK-KLM-058	
23	TERMINAL	JP.M.ELK-KLM-059	
24	16*16 MM TERMINAL	M.ELK-KLM-RKL-16*16-SR	
25	NO:2 25 MM TERMINAL	M.ELK-KLM-RKL-4*4-SRY	
26	PG-16 CABLE FITTING	JP.M.ELK-RKR-PLS-001	
27	BACK SHEET METAL	YSC-KNX.PG7-PN-0398	
28	40 CM X 7 CM CHIMNEY	JP.M.AKS-DKM-KZN-013	
29	RESISTANCE SUPPORT SHEET	YSC-KNX.PG9-LZ-0973	

TATRA